Composite Soldering Tip Tunnel 6.9×11.4mm - Hakko T15-1006

Item no. HK-T15-1006 | **Manufacturer Hakko** | **EAN 4962615027031**

Composite soldering tip in tunnel format measuring 6.9×11.4mm. Designed for use with Hakko FM-2027 and FM-2028 handpieces. Delivers reliable heat transfer and extended tip life for professional soldering applications.

TECHNICAL DATA

Ausführungsklasse	**TEC**
Country of Manufacture	**Japan**
HS-Code	**85159080**
Note	**Es gibt keine Lieferung von Hakko Produkten in die Schweiz**
Weight	**0.0099 kg**

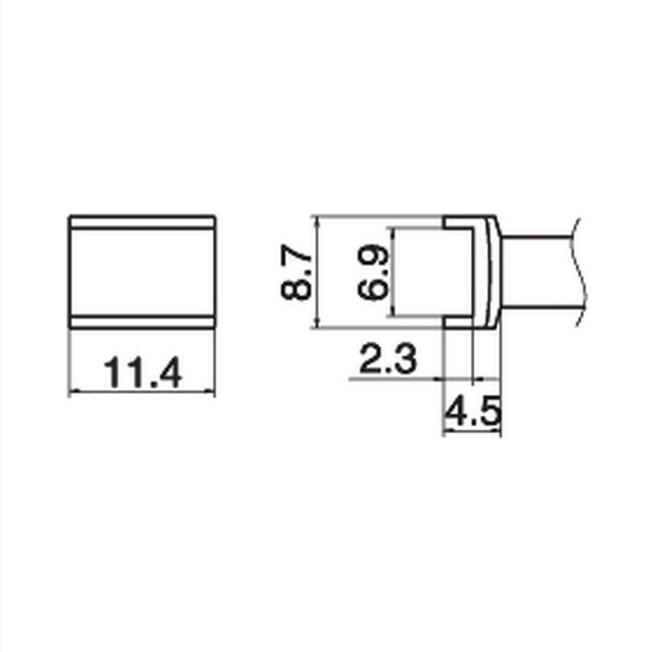

DESCRIPTION

OVERVIEW

The Hakko T15-1006 is a composite soldering tip featuring a tunnel format design with dimensions of 6.9×11.4mm. This replacement tip is engineered for use with Hakko FM-2027 and FM-2028 handpieces, providing consistent thermal performance and extended operational life in high-volume soldering environments.

KEY FEATURES

- Tunnel format geometry optimized for component lead soldering
- Composite construction for enhanced durability and heat retention
- Compatible with FM-2027 (70W) and FM-2028 (70W) handpieces
- Precise dimensions: 6.9×11.4mm for reliable contact
- Suitable for use with FM-203, FM-204, FM-206, FX-950, FX-951, and FX-952 stations

TECHNICAL SPECIFICATIONS

Tip Format	Tunnel
Tip Dimensions	6.9×11.4mm
Material	Composite

esd.equipment
Keldersstr. 15
42697 Solingen, Deutschland
VAT ID: DE269659389

Phone: +49 212 38340680
shop@esd-equipment.com
esd.equipment

Compatible Handpieces	FM-2027, FM-2028 (70W)
Compatible Stations	FM-203, FM-204, FM-206, FX-950, FX-951, FX-952
Country of Origin	Japan

APPLICATIONS

Ideal for general-purpose soldering, component lead attachment, and PCB assembly work. The tunnel format provides excellent heat distribution for reliable solder joints on standard through-hole and surface-mount applications.