Hot Air Nozzle PLCC 20×20 52-Pin - Hakko A1136B

Item no. HK-A1136B | **Manufacturer Hakko** | **EAN 4962615514883**

PLCC 20×20 52-pin hot air nozzle designed for Hakko hot air rework stations FR-801, FR-802, FR-803, 850, and 852. Enables precise soldering and desoldering of surface-mount components.

TECHNICAL DATA

Ausführungsklasse	**TEC**
Country of Manufacture	**Japan**
HS-Code	**85159080**
Note	**Es gibt keine Lieferung von Hakko Produkten in die Schweiz**
Weight	**0.0099 kg**

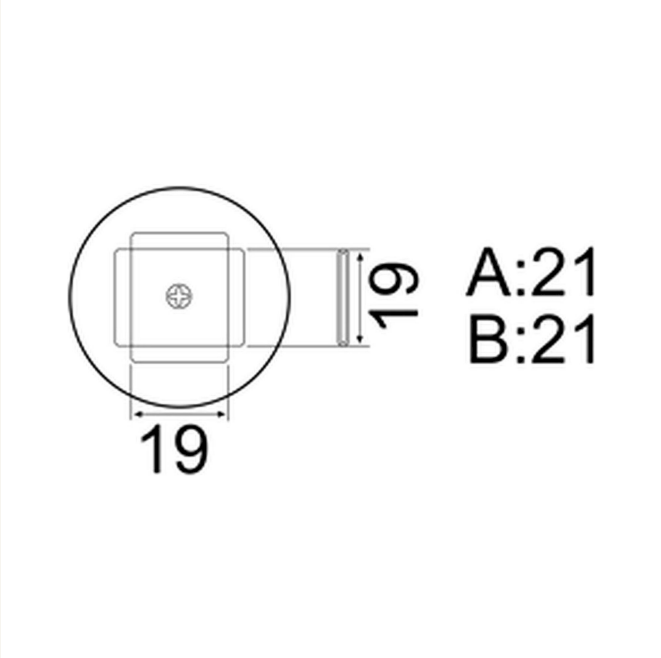

DESCRIPTION

OVERVIEW

The Hakko A1136B is a specialized hot air nozzle designed for reworking PLCC (Plastic Leaded Chip Carrier) packages measuring 20×20 mm with 52 pins. This nozzle is compatible with Hakko's FR-801, FR-802, FR-803, 850, and 852 hot air rework stations, providing precise thermal control for component removal and installation.

KEY FEATURES

- PLCC 20×20 mm package compatibility with 52-pin configuration
- Optimized nozzle geometry for uniform heat distribution
- Compatible with multiple Hakko hot air station models
- Precision-engineered for professional rework applications
- Durable construction for repeated use

TECHNICAL SPECIFICATIONS

Nozzle Type	PLCC 20×20 mm (52-pin)
Compatible Stations	FR-801, FR-802, FR-803, 850, 852
Country of Origin	Japan

esd.equipment
Keldersstr. 15
42697 Solingen, Deutschland
VAT ID: DE269659389

Phone: +49 212 38340680
shop@esd-equipment.com
esd.equipment

APPLICATIONS

Ideal for rework professionals and electronics manufacturers requiring precise thermal control for PLCC component soldering, desoldering, and replacement on PCBs. Suitable for prototype development, repair, and production environments.

esd.equipment
Keldersstr. 15
42697 Solingen, Deutschland
VAT ID: DE269659389

Phone: +49 212 38340680
shop@esd-equipment.com
esd.equipment